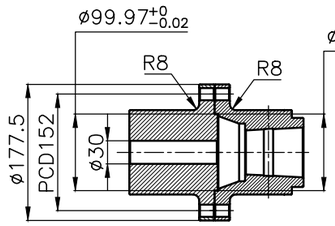


OUTPUT SHAFT COUPLING & PROPELLER COUPLING DIMENSION

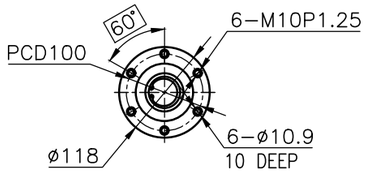


INPUT COUPLING DIMENSION

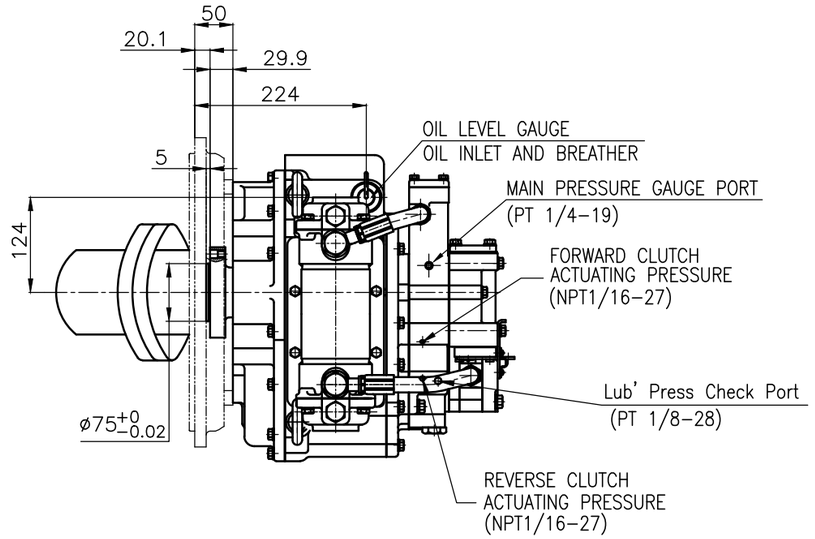


| DMT100IV MARINE TRANSMISSION SPECIFICATION | | | |
|---|---|---|---|
| GEAR RATIO | 1.21, 1.54, 1.84, 2.12, 2.52 | | |
| TOTAL WEIGHT | APPROX 150 kg(DRY) | | |
| OIL CAPACITY | APPROX. 7 L | | |
| OIL VISCOSITY | SAE # 30 | | |
| OIL PRESSURE | 1.961 ~ 2.353MPa | | CLUTCH OIL |
| DIRECTION OF ROTATION IN FORWARD | INPUT | C.C.W VIEWED FROM THE STERN | |
| | OUTPUT | C.C.W VIEWED FROM THE STERN | |
| OIL CHANGE INTERVAL | THE FIRST 100HOURS OF INITIAL OPERATION | | |
| | AND EVERY 1000HOURS THEREAFTER | | |
| SHIFTING LIMIT | UNDER 50% OF THE RATED ENGINE SPEED | | |
| OIL COOLER | WATER FLOW 40 ~ 60 L/min | | |
| | TEMPERATURE OF COOLING WATER | | MAX 32 °C |
| OPERATING TORQUE OF SHIFTING LEVER | | | UNDER 3 Nm |

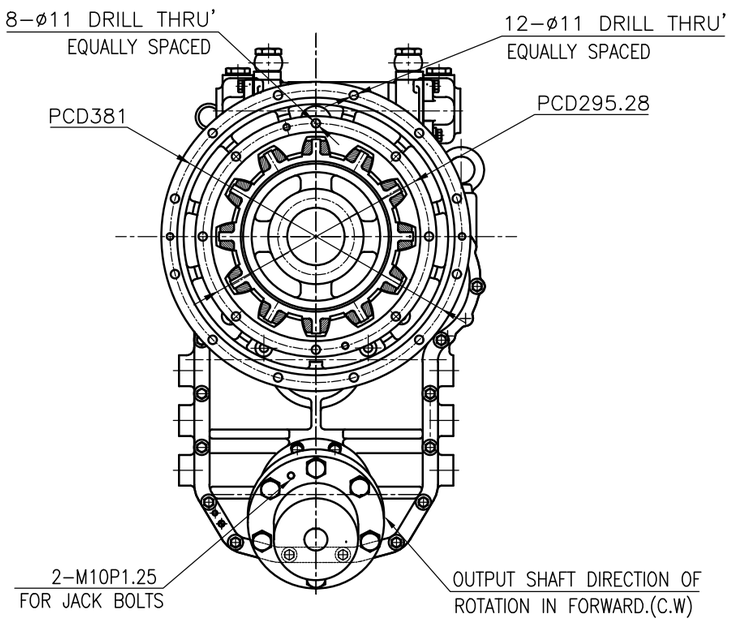


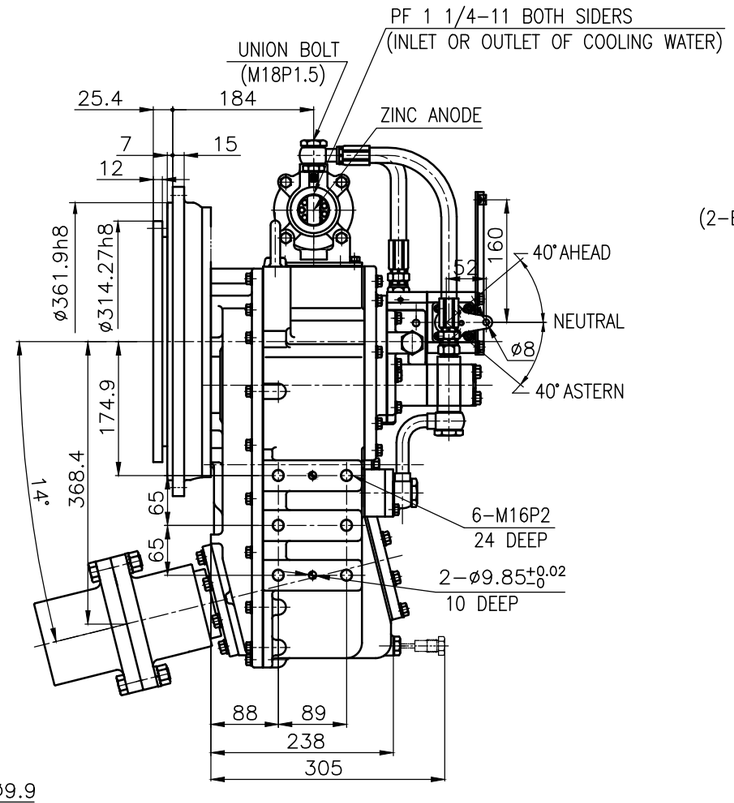


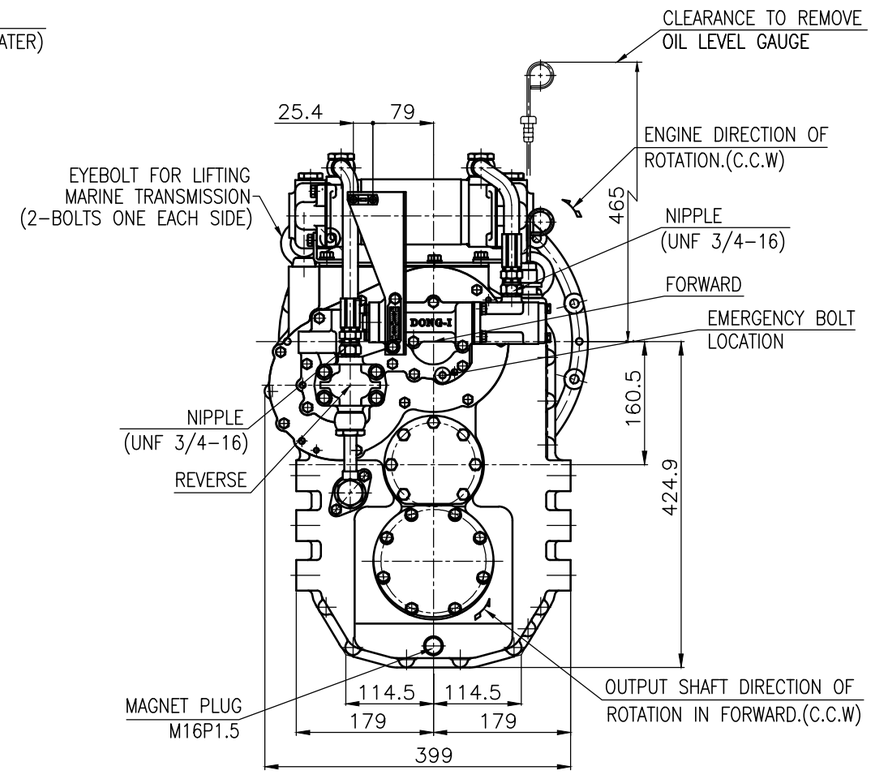


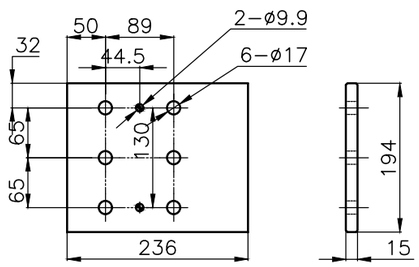


BRACKET DIMENSION

REMARK

1.HOUSING: SAE#4

2.DRIVING RING: SAE 10"

3.COULING TYPE : RUBBER

| 공통공차 TOLERANCE ON | | | |
|---|---|---|---|
| 분수 FRACTIONS | 소수 DECIMALS | 각도 ANGLES | |
| ± —— | ± —— | ± —— | |

| 일반공차 절삭가공 | | | |
|---|---|---|---|
| 구분 | 조급 | 중급 | 정급 |
| 1 초과 4 이하 | ± 0.3 | ± 0.1 | ± 0.05 |
| 4 16 | ± 0.5 | ± 0.2 | ± 0.07 |
| 16 63 | ± 0.7 | ± 0.3 | ± 0.1 |
| 63 250 | ± 1.2 | ± 0.5 | ± 0.2 |
| 250 1000 | ± 2.0 | ± 0.8 | ± 0.3 |

| 번호 NO. | 품번 PART NO. | 품명 PART NAME | 개수 Q'TY | 재질 MATERIAL | 규격 SIZE | 비고 REMARKS |
|---|---|---|---|---|---|---|

| | | | |
|---|---|---|---|
| 재질 MATERIAL | —— | | |
| 작성 DATE 2018.09.12 | 척도 SCALE N/S | | |
| 승인 APPROVED BY | 검도 CHECKED BY | 제도 DRAWN | 설계 DESIGNED |
| JK.Kim | TH.Cha | GH.Park | |

| | |
|---|---|
| 형식 TYPE | DMT100IV |
| 원도번 ORIGINAL DWG. NO. | |
| 품명 NAME | MARINE TRANSMISSION |
| 도번 DWG. NO. | V100000GE~GH-410RCH |
| 개정(REV.) | 000 |
| 크기 SIZE | A3 |
| 코드번호 CODE ID. NO. | |

D-I INDUSTRIAL

SHEET 1 OF 1

동이기술-004(841×594)

DWG.NO. V100000GE~GH-410RCH 개정(REV.) 000

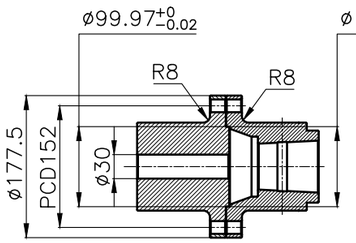


OUTPUT SHAFT COUPLING & PROPELLER COUPLING DIMENSION

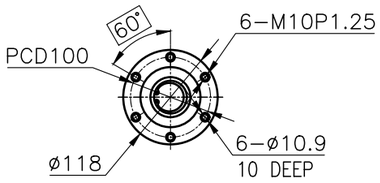


INPUT COUPLING DIMENSION

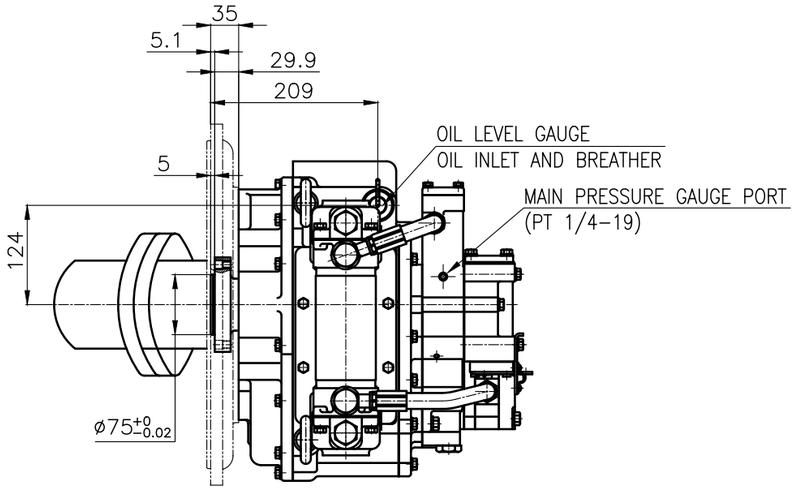


| DMT100IV MARINE TRANSMISSION SPECIFICATION | | |
|---|---|---|
| GEAR RATIO | 2.54, 2.74, 3.26, 3.76 | |
| TOTAL WEIGHT | APPROX 150 kg(DRY) | |
| OIL CAPACITY | APPROX. 7 L | |
| OIL VISCOSITY | SAE # 30 | |
| OIL PRESSURE | 1.961 ~ 2.353MPa | CLUTCH OIL |
| DIRECTION OF ROTATION IN FORWARD | INPUT | C.C.W VIEWED FROM THE STERN |
| | OUTPUT | C.C.W VIEWED FROM THE STERN |
| OIL CHANGE INTERVAL | THE FIRST 100HOURS OF INITIAL OPERATION | |
| | AND EVERY 1000HOURS THEREAFTER | |
| SHIFTING LIMIT | UNDER 50% OF THE RATED ENGINE SPEED | |
| OIL COOLER | WATER FLOW 40 ~ 60 L/min | |
| | TEMPERATURE OF COOLING WATER | MAX 32 °C |
| OPERATING TORQUE OF SHIFTING LEVER | | UNDER 3 Nm |

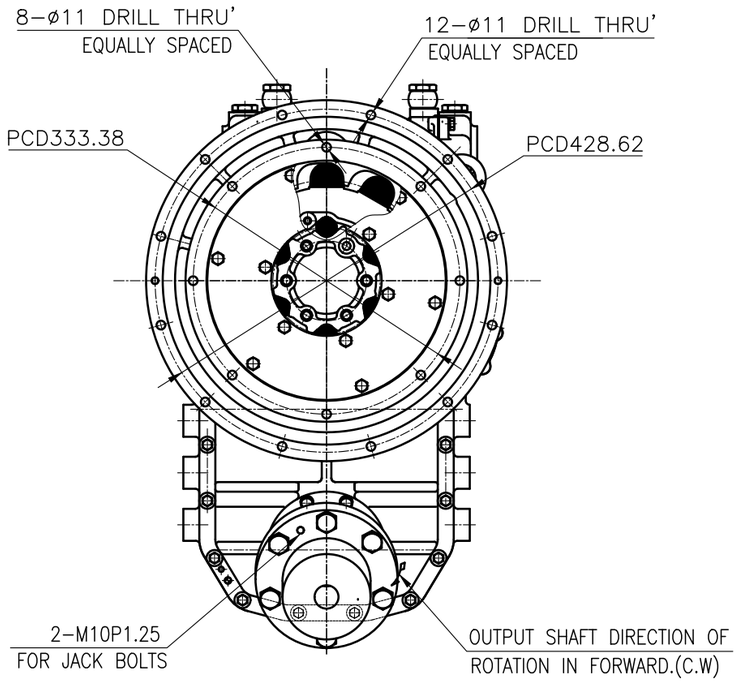


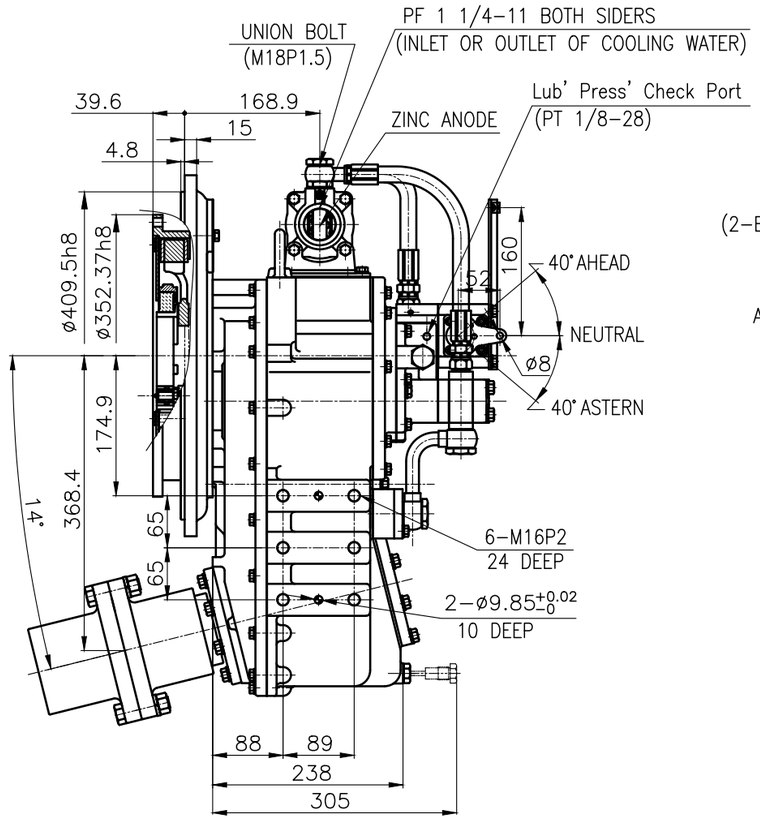


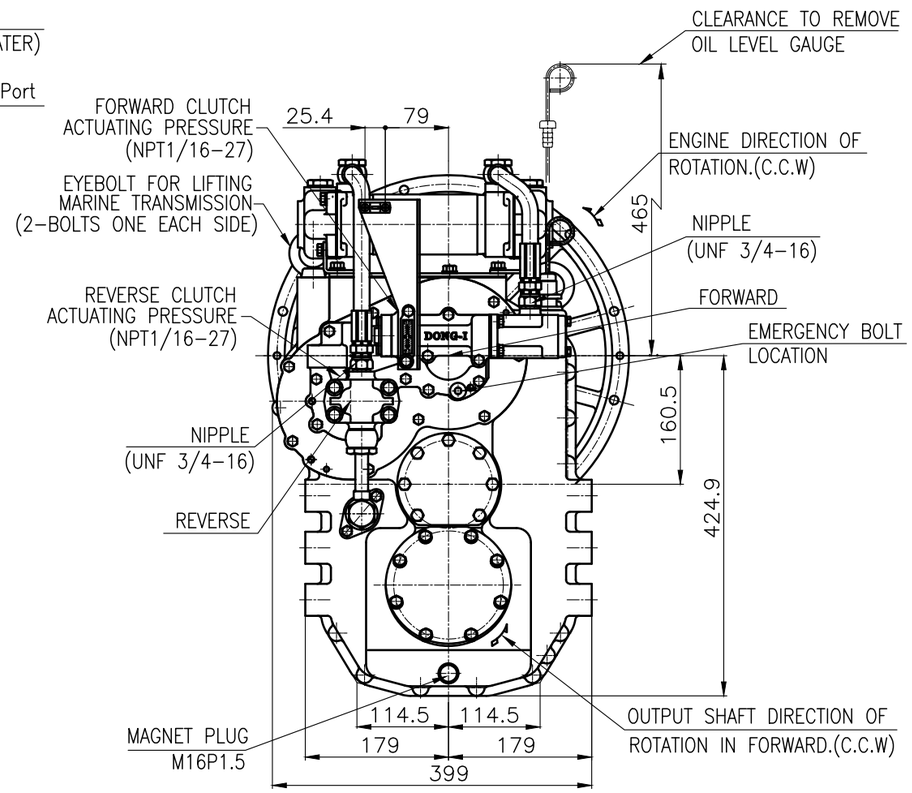


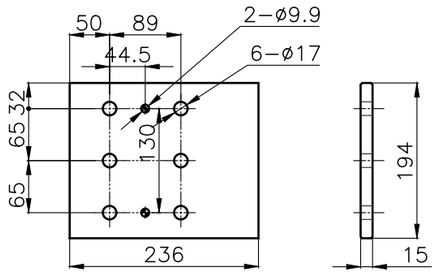


BRACKET DIMENSION

REMARK

1.HOUSING: SAE#3

2.DRIVING RING: SAE 11.5"

3.COUPLING TYPE : DUAL STAGE

| 공통공차 TOLERANCE ON | | | |
|---|---|---|---|
| 분수 FRACTIONS | 소수 DECIMALS | 각도 ANGLES | |
| ± —— | ± —— | ± —— | |

| 일반공차 절삭가공 | | | |
|---|---|---|---|
| 구분 | 조급 | 중급 | 정급 |
| 1 초과 4 이하 | ± 0.3 | ± 0.1 | ± 0.05 |
| 4 16 | ± 0.5 | ± 0.2 | ± 0.07 |
| 16 63 | ± 0.7 | ± 0.3 | ± 0.1 |
| 63 250 | ± 1.2 | ± 0.5 | ± 0.2 |
| 250 1000 | ± 2.0 | ± 0.8 | ± 0.3 |

| 번호 NO. | 품번 PART NO. | 품명 PART NAME | 개수 Q'TY | 재질 MATERIAL | 규격 SIZE | 비고 REMARKS |
|---|---|---|---|---|---|---|
| | | | | | | |

| | | | |
|---|---|---|---|
| 재질 MATERIAL | —— | | |
| 작성 DATE 2018.06.20 | 척도 SCALE N/S | | |
| 승인 APPROVED BY | 검도 CHECKED BY | 제도 DRAWN | 설계 DESIGNED |
| JK.Kim | TH.Cha | CH.Baek | |

D-I INDUSTRIAL

| | | | |
|---|---|---|---|
| 형식 TYPE | DMT100IV | | 원도번 ORIGINAL DWG. NO. |
| 품명 NAME | MARINE TRANSMISSION | | |
| 도번 DWG. NO. | V100000GE~GH-3115DC | | 개정(REV.) 000 |
| 크기 SIZE | A 3 | 코-드 번호 CODE ID. NO. | |

SHEET 1 OF 1

종이기준-004(841×594)

도번 V100000GE~GH-3115DC 개정(REV.) 000

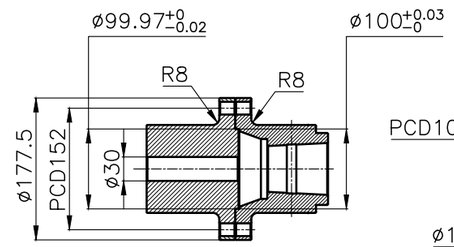


OUTPUT SHAFT COUPLING & PROPELLER COUPLING DIMENSION

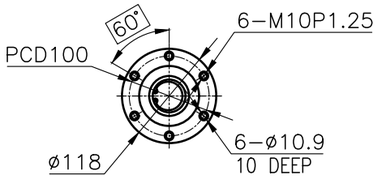


INPUT COUPLING DIMENSION

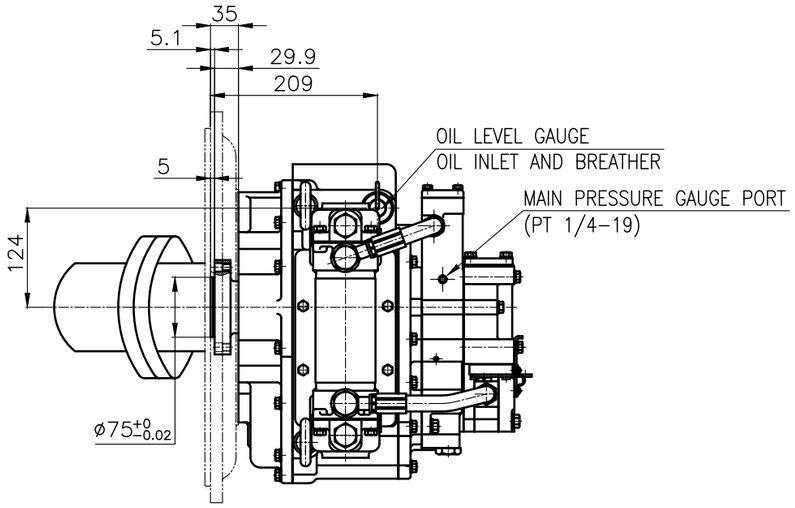


| DMT100IV MARINE TRANSMISSION SPECIFICATION | | | |
|---|---|---|---|
| GEAR RATIO | 1.21, 1.54, 1.84, 2.12, 2.52 | | |
| TOTAL WEIGHT | APPROX 150 kg(DRY) | | |
| OIL CAPACITY | APPROX. 7 L | | |
| OIL VISCOSITY | SAE # 30 | | |
| OIL PRESSURE | 1.961 ~ 2.353MPa | CLUTCH OIL | |
| DIRECTION OF ROTATION IN FORWARD | INPUT | C.C.W VIEWED FROM THE STERN | |
| | OUTPUT | C.C.W VIEWED FROM THE STERN | |
| OIL CHANGE INTERVAL | THE FIRST 100HOURS OF INITIAL OPERATION | | |
| | AND EVERY 1000HOURS THEREAFTER | | |
| SHIFTING LIMIT | UNDER 50% OF THE RATED ENGINE SPEED | | |
| OIL COOLER | WATER FLOW 40 ~ 60 L/min | | |
| | TEMPERATURE OF COOLING WATER | MAX 32 °C | |
| OPERATING TORQUE OF SHIFTING LEVER | UNDER 3 Nm | | |

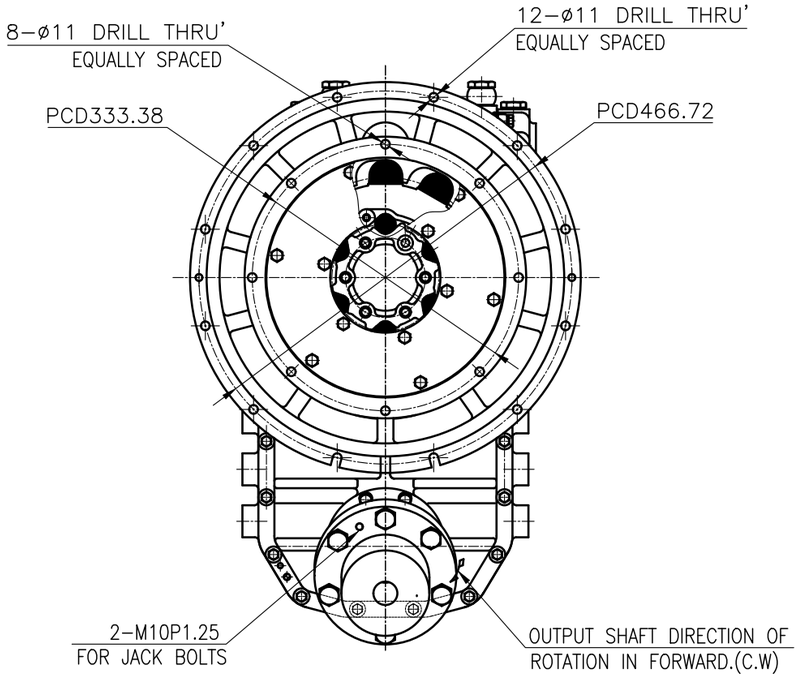


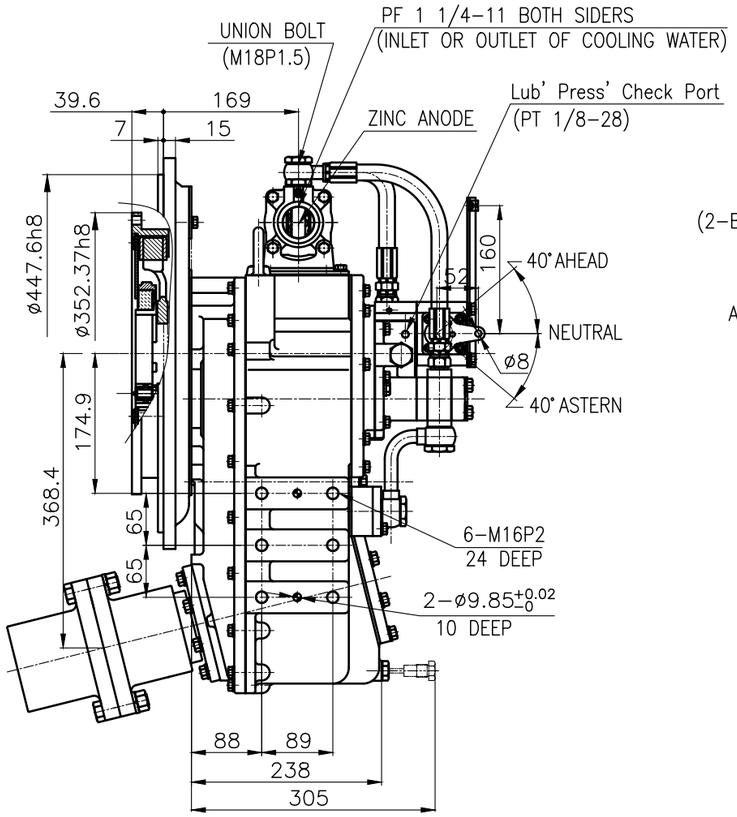


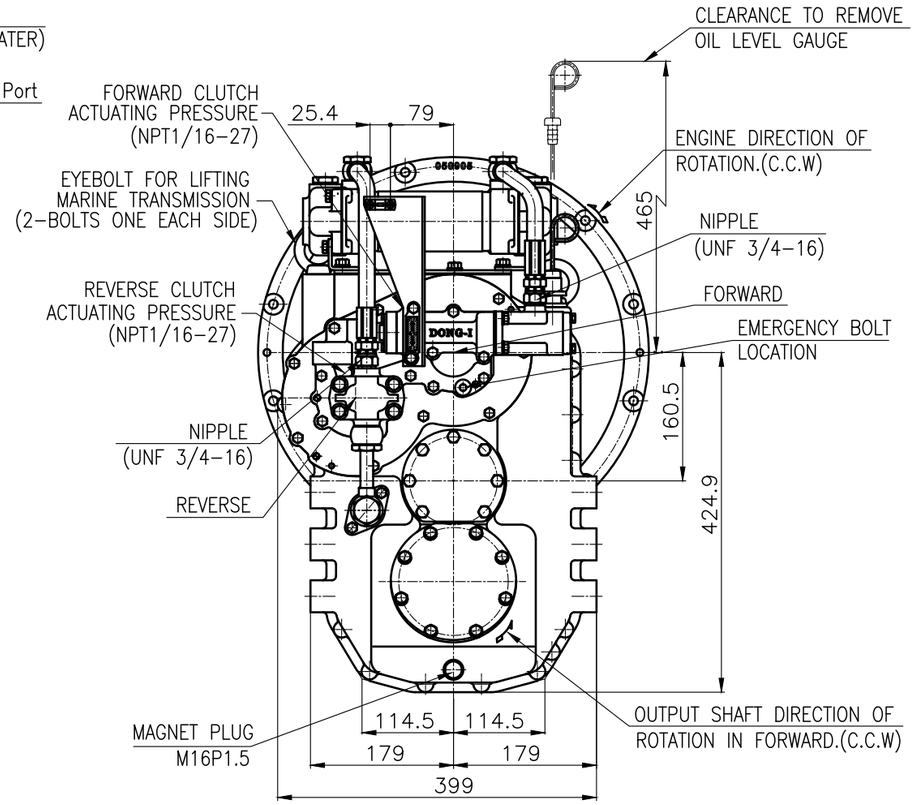


REMARK

1.HOUSING: SAE#2

2.DRIVING RING: SAE 11.5"

3.COUPLING TYPE : DUAL STAGE

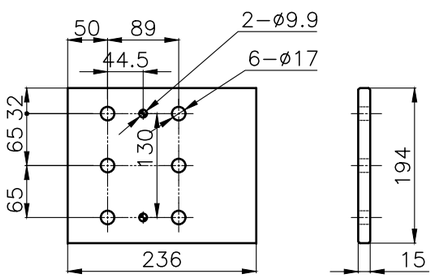


BRACKET DIMENSION

| 공통공차 TOLERANCE ON | | | |
|---|---|---|---|
| 분수 FRACTIONS | 소수 DECIMALS | 각도 ANGLES | |
| ± —— | ± —— | ± —— | |
| 일반공차 절삭가공 | | | |
| 구분 | 조급 | 중급 | 정급 |
| 1 초과 4 이하 | ± 0.3 | ± 0.1 | ± 0.05 |
| 4 16 | ± 0.5 | ± 0.2 | ± 0.07 |
| 16 63 | ± 0.7 | ± 0.3 | ± 0.1 |
| 63 250 | ± 1.2 | ± 0.5 | ± 0.2 |
| 250 1000 | ± 2.0 | ± 0.8 | ± 0.3 |

| 번호 NO. | 품번 PART NO. | 품명 PART NAME | 개수 Q'TY | 재질 MATERIAL | 규격 SIZE | 비고 REMARKS |
|---|---|---|---|---|---|---|

| | | | |
|---|---|---|---|
| 재질 MATERIAL | —— | | |
| 작성 DATE 2018.06.20 | 척도 SCALE N/S | | |
| 승인 APPROVED BY | 검도 CHECKED BY | 제도 DRAWN | 설계 DESIGNED |
| JK.Kim | TH.Cha | CH.Baek | |

D-I INDUSTRIAL

| | | | |
|---|---|---|---|
| 형식 TYPE | DMT100IV | | 원도번 ORIGINAL DWG. NO. |
| 품명 NAME | MARINE TRANSMISSION | | |
| 도번 DWG. NO. | V100000GE~GH-2115DC | | 개정(REV.) 000 |
| 크기 SIZE | A3 | 코드번호 CODE ID. NO. | |



동이기술-004(841×594)